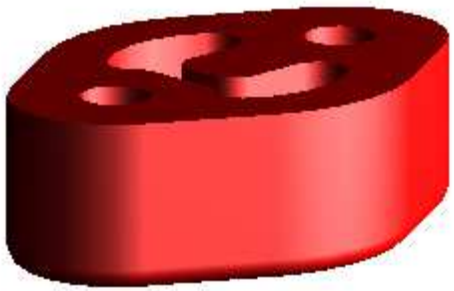

AUXILIARY VIEW (1 : 1)

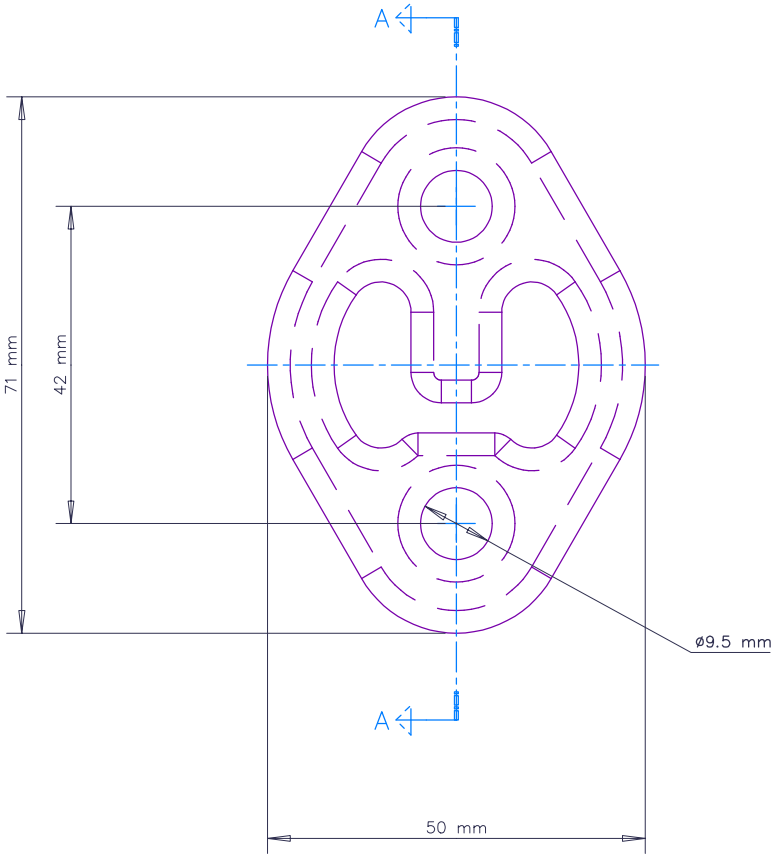

TOP VIEW (1 : 1)

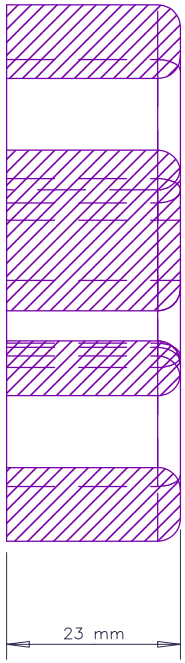

SECTION A–A (1 : 1)

NOTES:

1. MATERIAL: POLYURETHANE
   HIGH TEMPERATURE SPEC
2. FINISH: COLOUR = RED
3. ALL DIMENSIONS AS PER FINISHED PART.

No.	REVISION	BY	CHKD	DATE
0	ORIGINAL ISSUE	PS		07/12/09

DESCRIPTION
EXHAUST MOUNT
EXH005

© COPYRIGHT. ALL RIGHTS RESERVED
THIS DRAWING IS STRICTLY CONFIDENTIAL AND MUST NOT BE COPIED, REPRODUCED OR ADAPTED, NOR MAY ARTICLES BE MANUFACTURED IN ACCORDANCE WITH THE DRAWING WITHOUT PRIOR WRITTEN PERMISSION OF POWERFLEX.

POWERFLEX
EPTG LTD

MATERIAL: POLYURETHANE
DRAWING No.: EXH005
REV: 0